KraussMaffei

Engineering Passion

28.11.2016

Trends in lightweight design for the automotive industry

Stefan Fenske, KraussMaffei Technologies GmbH

11th PAGEV Turkish Plastics industry congress, December 6th, Istanbul

Agenda

- Overview on lightweight solutions by KraussMaffei
- High Pressure – Resin Transfer Molding (HP-RTM)
- Wet pressing
- FiberForm
- IMC + CellForm
- ColorForm

Lightweight portfolio covers the entire range of requirements

Schematic lightweight technology portfolio

RPM		IMM		
RTM	Long Fiber Injection	FiberForm	Injection Molding Compounder	Short glass fiber injection molding

Increasing mechanical properties

Increasing cost efficiency

KraussMaffei

Agenda

- Overview on lightweight solutions by KraussMaffei
- High Pressure – Resin Transfer Molding (HP-RTM)
- Wet pressing
- FiberForm
- IMC + CellForm
- ColorForm

RTM process family

Selection of the technologies according to part design and properties

HP-RTM

T-RTM

C-RTM

Wet pressing

Surface RTM

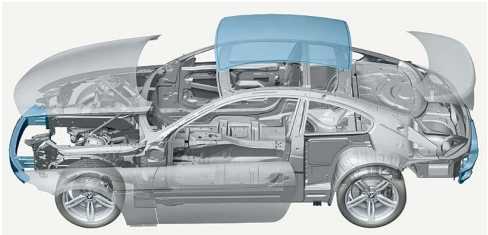

HP-RTM Technology

High Pressure Impingement and Injection Process

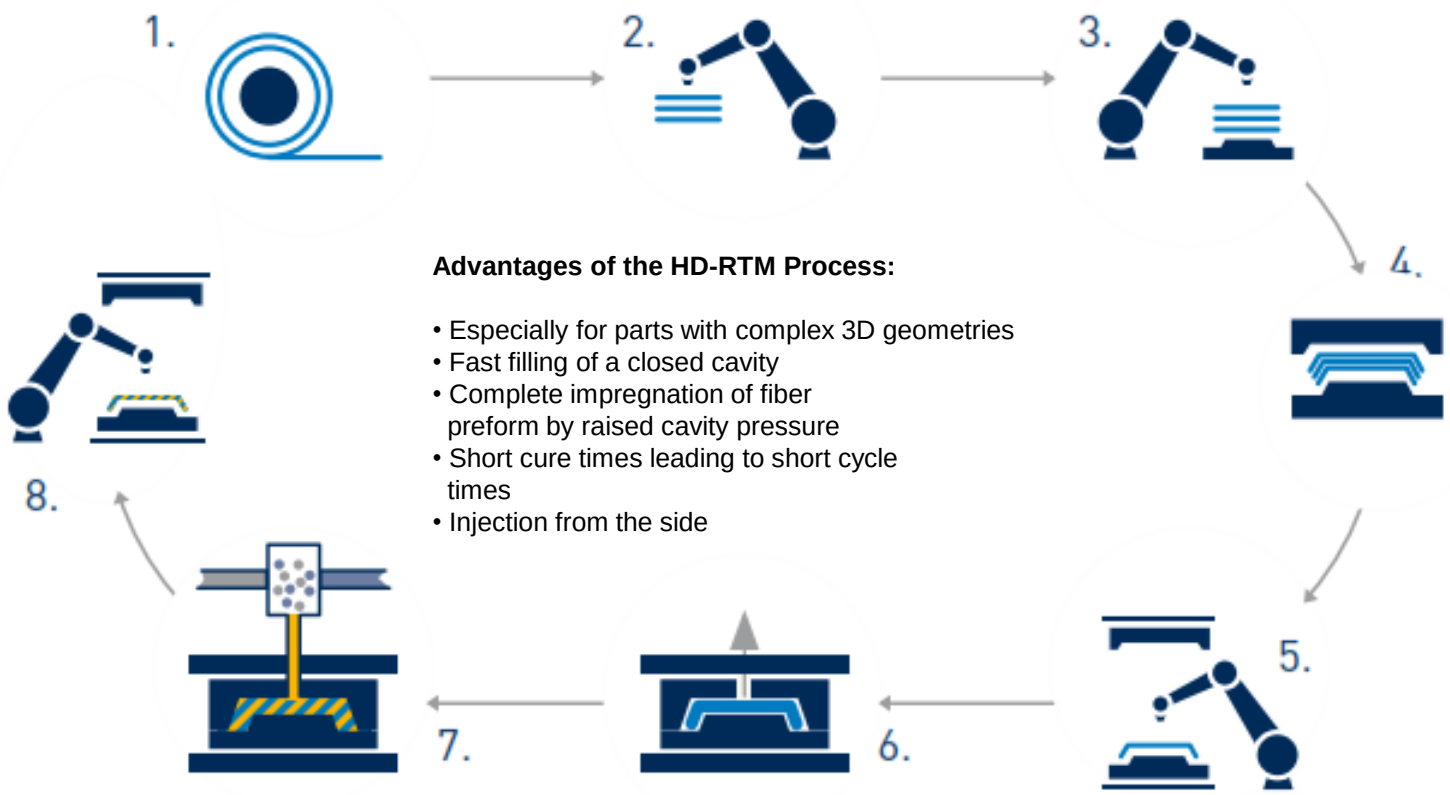

Advantages of the HD-RTM Process:

- Especially for parts with complex 3D geometries
- Fast filling of a closed cavity
- Complete impregnation of fiber preform by raised cavity pressure
- Short cure times leading to short cycle times
- Injection from the side

Which are typical applications for HP-RTM?

Structural parts and carbon designer parts

Underbody structure

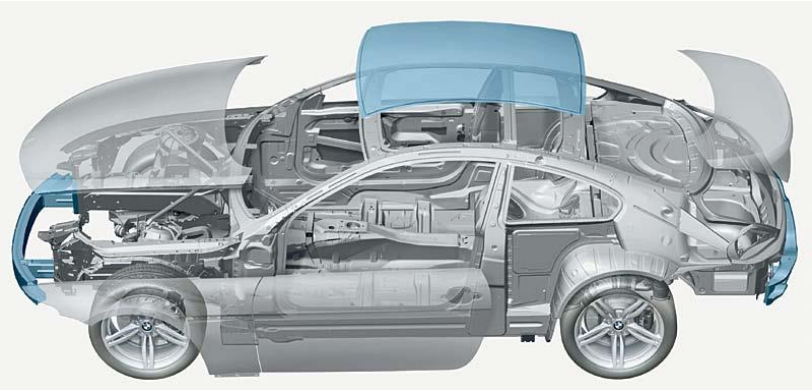

Side Frame

Seat structure

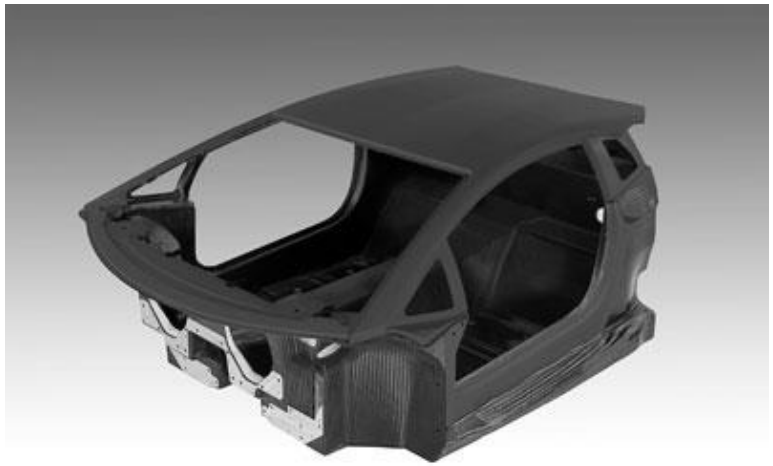

Roof and Bonet

KraussMaffei

Agenda

- Overview on lightweight solutions by KraussMaffei
- High Pressure – Resin Transfer Molding (HP-RTM)
- Wet pressing
- FiberForm
- IMC + CellForm
- ColorForm

Wet-RTM Technology – Wet pressing

Schematic process description

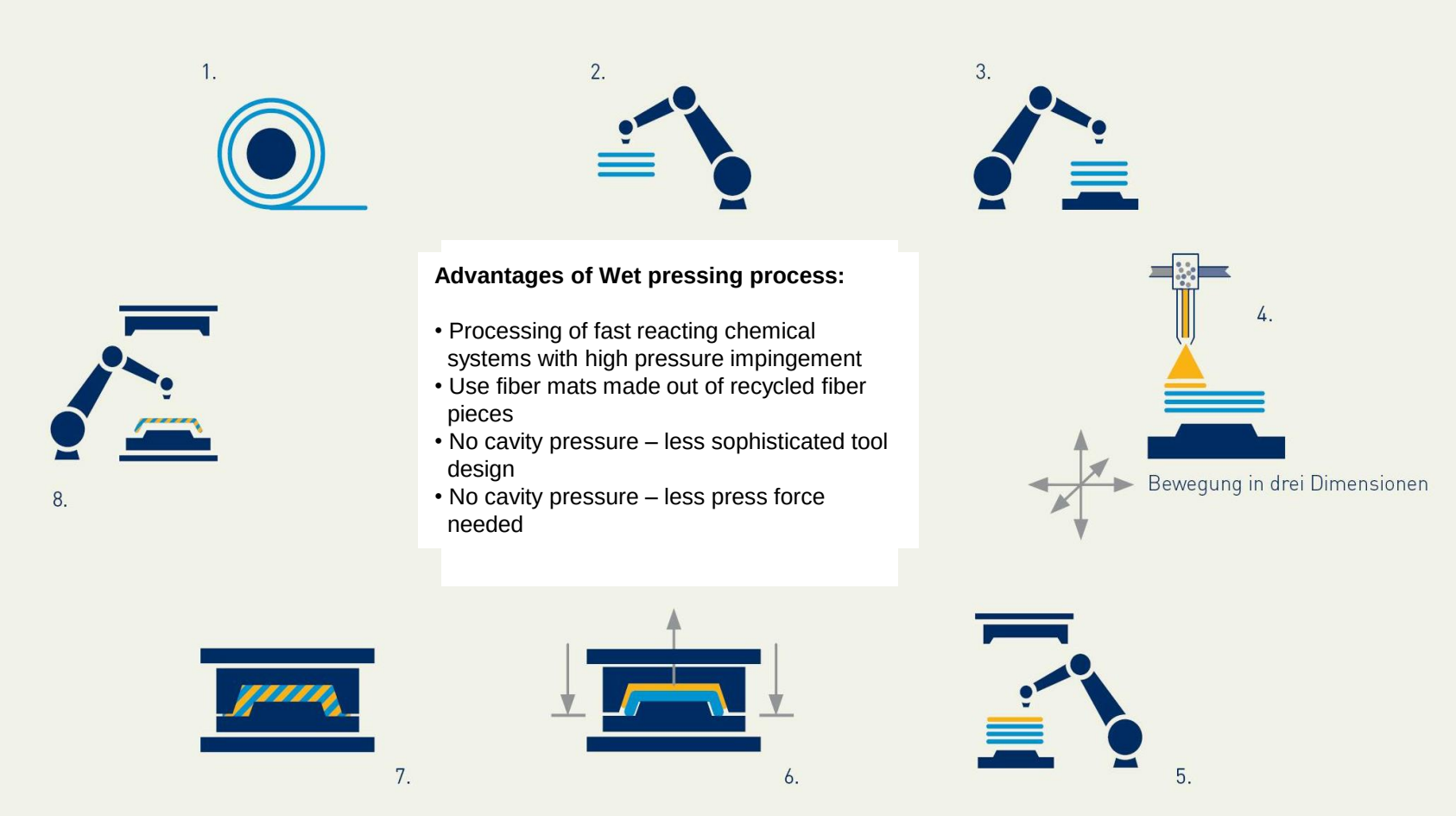

Advantages of Wet pressing process:

- Processing of fast reacting chemical systems with high pressure impingement
- Use fiber mats made out of recycled fiber pieces
- No cavity pressure – less sophisticated tool design
- No cavity pressure – less press force needed

Future strategy of lightweight design

Wet pressing – application examples

BMW i8
Floor reinforcement

BMW 7-series
Transmission channel reinforcement

BMW 7-series
Roof spreader beam

KraussMaffei

Agenda

- Overview on lightweight solutions by KraussMaffei
- High Pressure – Resin Transfer Molding (HP-RTM)
- Wet pressing
- FiberForm
- IMC + CellForm
- ColorForm

Textile Reinforced parts with functional integration

FiberForm - Combination of injection molding and thermoforming

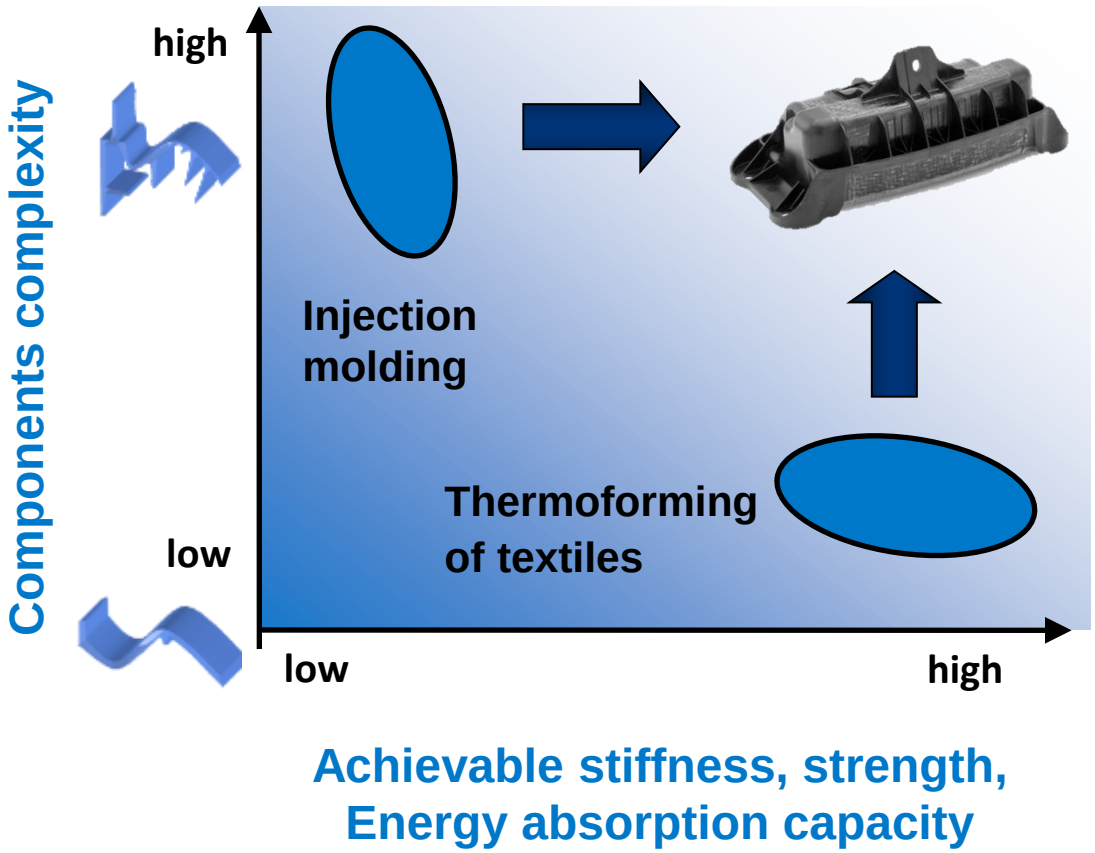

Combination of both methods leads to:

- High strength and stiffness
- High design freedom
- High functional integration
- High degree of automation
- Short cycle times

Cost efficient production in an one-stage-process

FiberForm – schematic process description

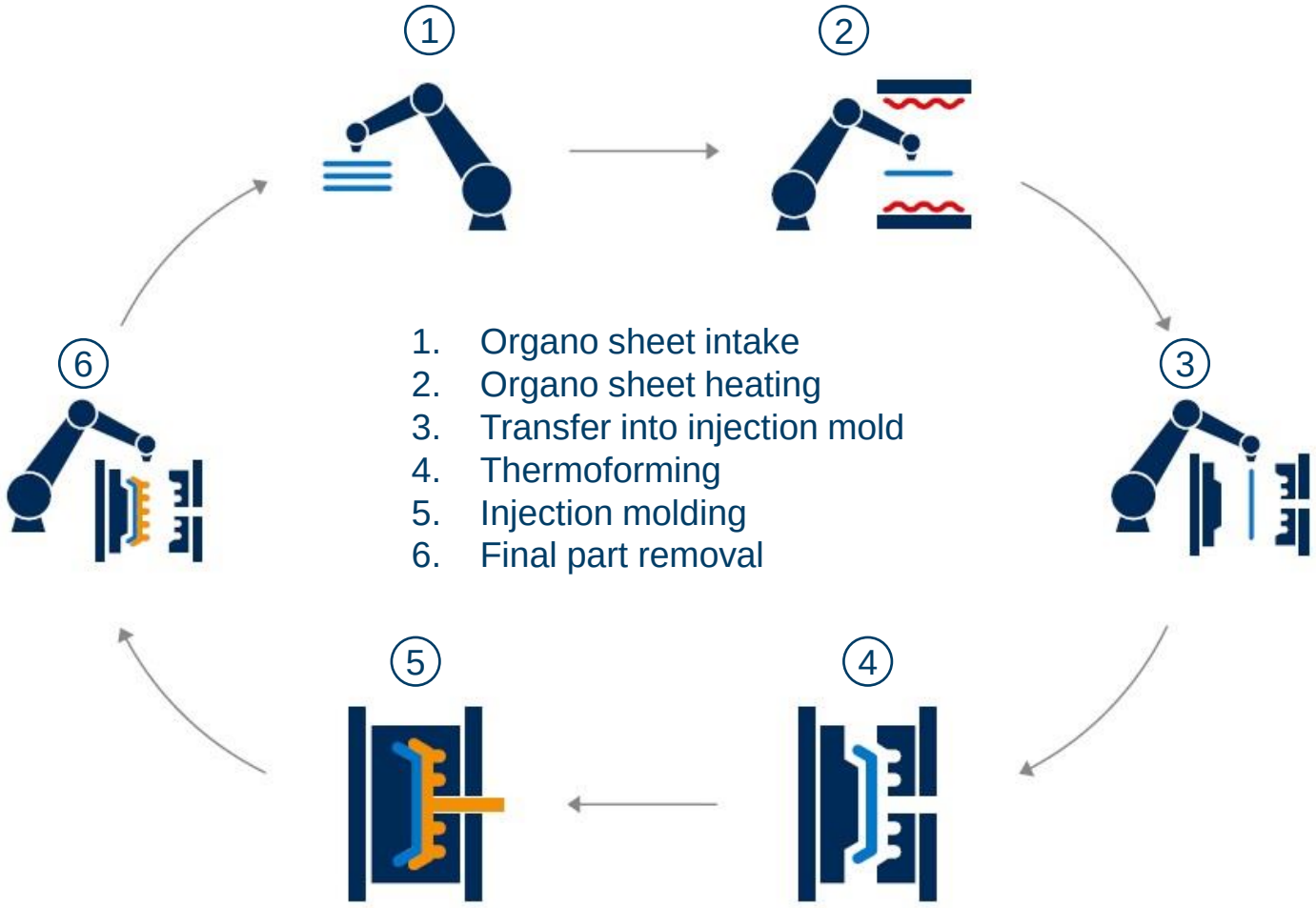

1. Organo sheet intake
2. Organo sheet heating
3. Transfer into injection mold
4. Thermoforming
5. Injection molding
6. Final part removal

KraussMaffei

Agenda

- Overview on lightweight solutions by KraussMaffei
- High Pressure – Resin Transfer Molding (HP-RTM)
- Wet pressing
- FiberForm
- IMC + CellForm
- ColorForm

Get the benefit together

Injection Moulding Compounder (IMC) – Principle

Injection molding:

- Single screw
- Material processing
- Discontinuous process

Extrusion:

- Twin screw
- Material compounding
- Continuous process

The Injection Molding Compounder (IMC)

Schematic process description

Melt buffer

Shut-off nozzle

Re-direction valve

CX-, GX- or MX-clamp

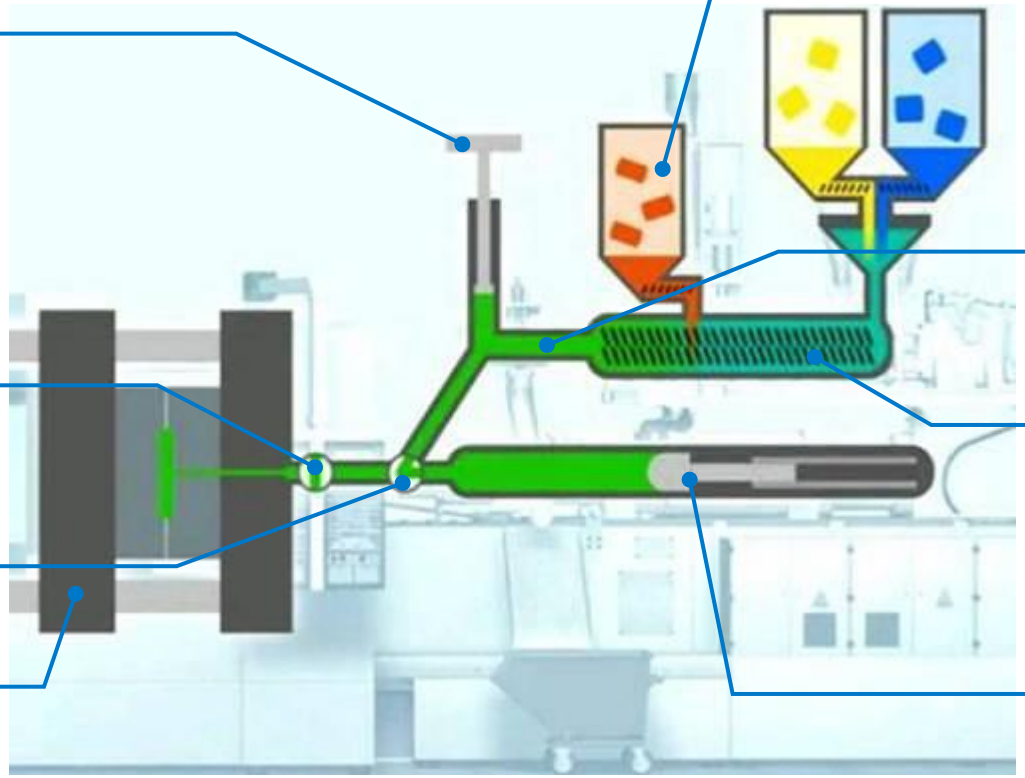

Weighing, dosing and conveying systems

Start-up valve with container

Twin screw extruder

Shot-Pot-Injection piston

KraussMaffei

Agenda

- Overview on lightweight solutions by KraussMaffei
- High Pressure – Resin Transfer Molding (HP-RTM)
- Wet pressing
- FiberForm
- IMC + CellForm
- ColorForm

KraussMaffei

Painting integrated in an one-step injection molding process

ColorForm – Process principle and key benefits

- Painting of a thermoplastic base carrier in the closed injection molding tool with a 2K-PUR/PUA-System without any release agent
- After curing time a complete finished, varnished part can be ejected out of the tool
- The part is in the complete process in the same tool. Out of this reason a very high part quality and dimensions stability can be provided

Our benefits

- Complete finished, varnished parts out of the tool
- Short process steps
- Less logistics, high automation standard
- Less scrap ratio

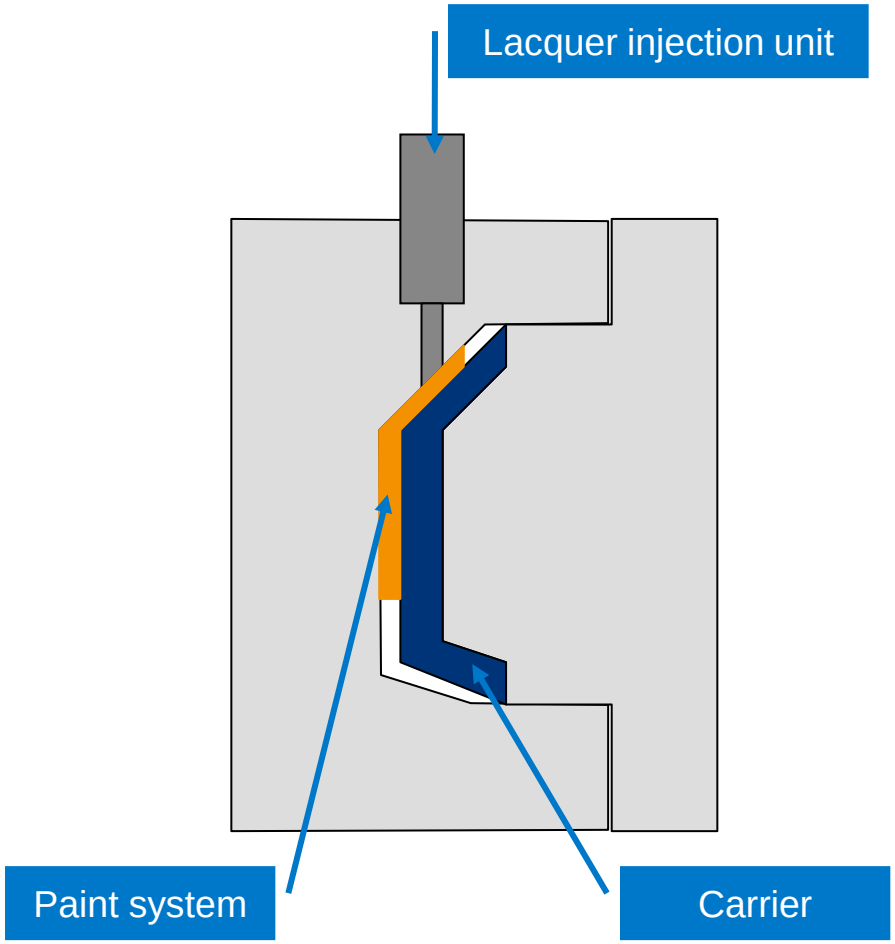

World’s first series application with customer Weidplas

A-pillar paneling of the new Peugeot 3008 SUV

Vielen Dank für Ihre Aufmerksamkeit

Stefan Fenske
Technology manager FiberForm & IMC

KraussMaffei Technologies GmbH
Krauss-Maffei-Straße 2
80997 München
Germany

Telefon +49 (0) 89 8899-3231
Mobil +49 (0) 172 741 7191
Email stefan.fenske@kraussmaffei.com